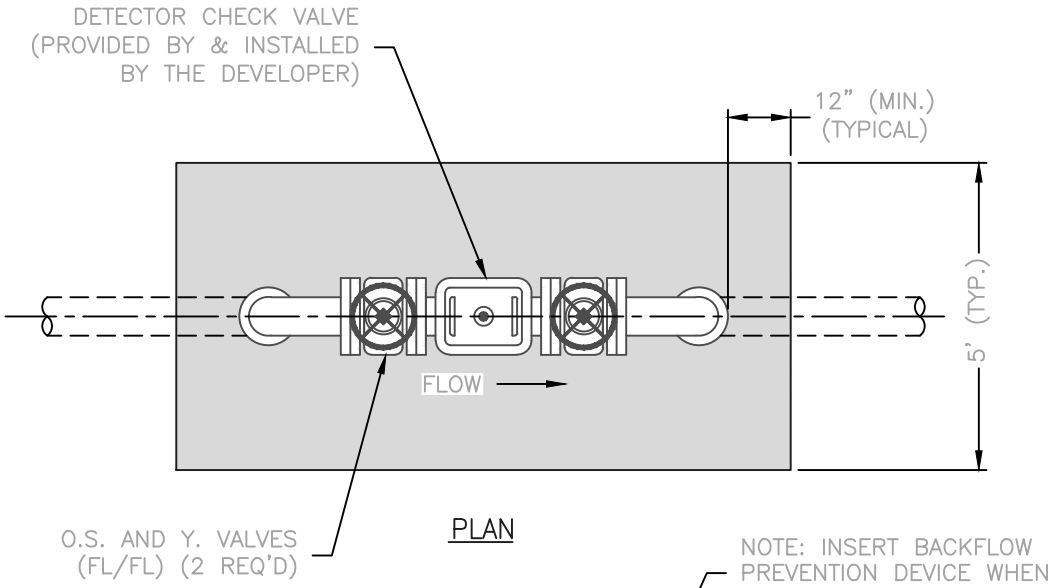

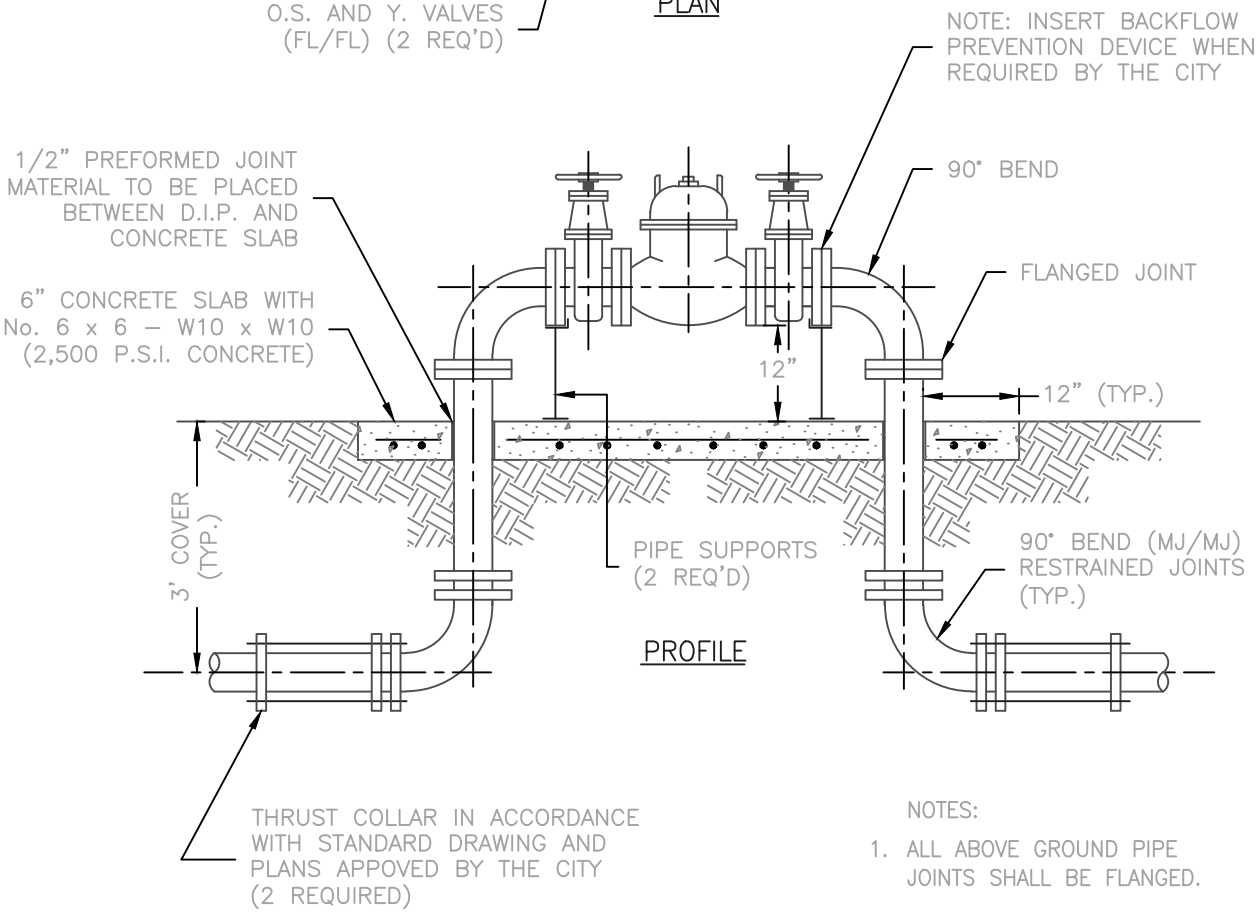

NOTES:

1. ALL ABOVE GROUND PIPE JOINTS SHALL BE FLANGED.

DETECTOR CHECK VALVE ASSEMBLY

NOT TO SCALE (W–16)

REV	DATE	BY	REVISIONS

TECHNICAL STANDARDS MANUAL

DETECTOR CHECK
VALVE ASSEMBLY
TECHNICAL STANDARDS MANUAL
CITY OF LYNN HAVEN FLORIDA

CAD FILE: WATER
DWN BY: REF
DATE: 30 APR 07
SHEET NO: 16 OF 27
DETAIL
W-16

© CITY OF LYNN HAVEN ALL RIGHTS RESERVED. NO PART OF THIS DOCUMENT MAY BE REPRODUCED OR UTILIZED IN ANY FORM WITHOUT PRIOR WRITTEN AUTHORIZATION OF THE CITY OF LYNN HAVEN